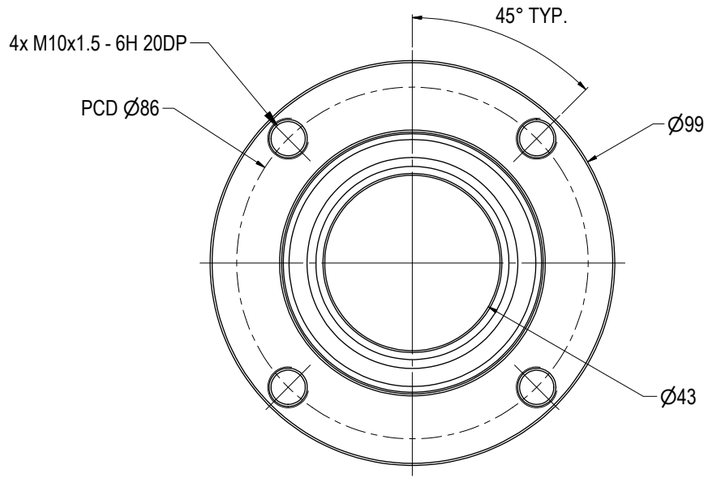

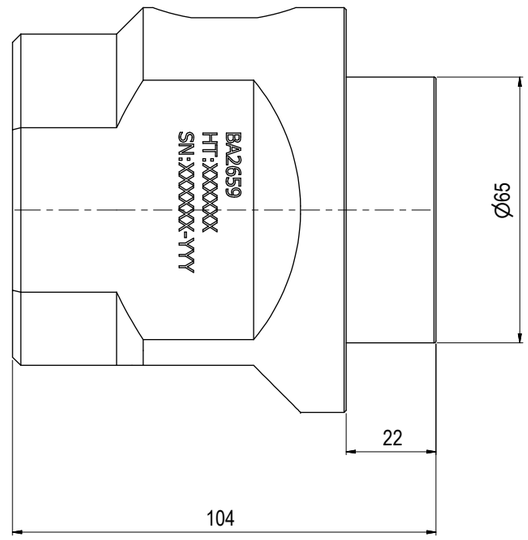

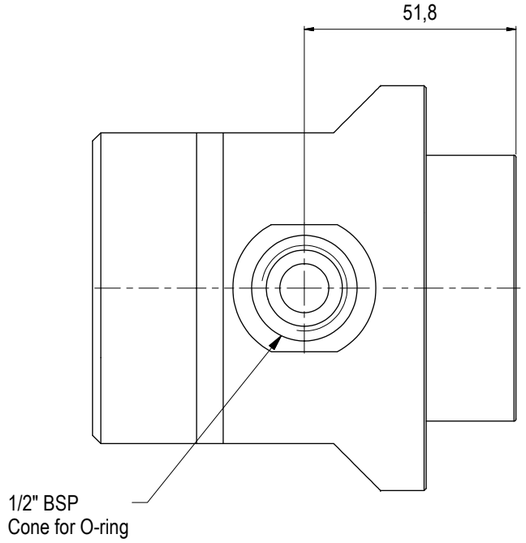

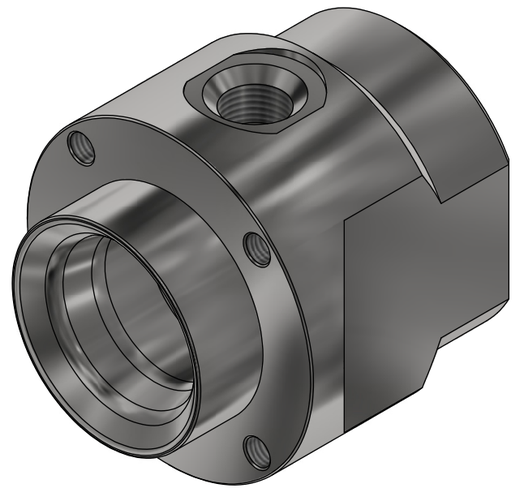

NOTE: 1
DESIGN CODE:
API 17H Type 1

NOTE: 2
TECHNICAL CLASSIFICATION:

Article Type:	001-Hot Stabs
Main Group:	1.03. Ø43 Hot Stab
Intermediate Group:	1.2.02. Receptacle
Sub Group:	1.2.6.01. Single

NOTE: 3
INTERFACE INFORMATION:

Pressure Rating Bar:	690
Material:	S32750 SUPER DUPLEX
Weight:	3,2 kg
Volume:	0,41 dm^3
Surface Area:	554 cm^2
Hydraulic:	1/2" BSP
Mechanical:	4xM10@PCD 86
Electrical:	N/A
Com. & Protocol:	N/A

NOTE: 4
WEB LINK:
http://e-sea.bluelogic.no/main.aspx?page=article&artno=BA2659

NOTE: 5
ADDITIONAL INFORMATION:
Other hydraulic port interface can be delivered on customers request.

Rev.	Date	Reason for issue	Revision change	Made	Chk'd	Appr.
02	12.5.2014	9-IFU (Issued for Use)		WTJ	HNJ	WTJ
01	10.8.2012	7-IFC (Issued for Construction)		HNJ	LAE	TBA

BLUE LOGIC

This Drawing is the Property of Blue Logic AS © and must Not be Loaned, Reproduced or Transferred to others without written Permission

Dwg Scale: NTS
Dwg Proj:
Dwg Format: A3

Drawing title: Ø43 SP Rec 10k Interv BSP 1/2"

Drawing number: BA2659

Rev. 02